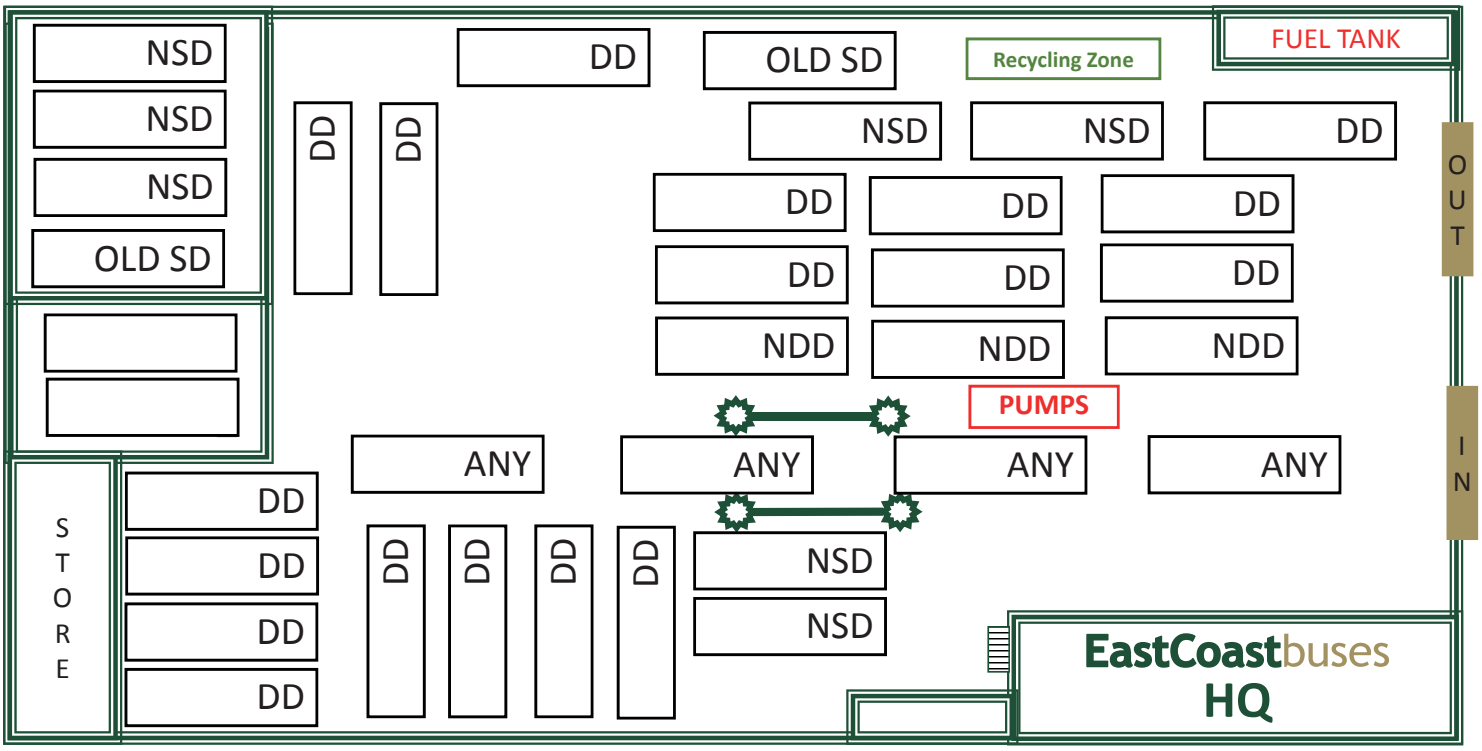Musselburgh Garage Floor Plan